SCAN TRONIC
COMBUSTION OPTIMIZING

Oxygen Control
OC 2026



Technical Information
and User Guide

SCAN TRONIC
COMBUSTION OPTIMIZING

Scan Tronic ApS
Sverigesvej 14
DK-8700
info@scan-tronic.dk
www.scan-tronic.dk

Oxygen Control OC 2026
Technical Information and Installation

Table of contents

1.0. General information..... 3
1.1 Introduction..... 3
1.2 Principle of function..... 3
2.0 Instrument identification..... 3
3.0 Technical specifications..... 3
3.1 Wide Band Lambda Sensor..... 3
3.2 Oxygen Control OC 2026..... 4
4.0 Installation..... 5
4.1 Installation of the sensor..... 5
4.2 Installation of Oxygen control OC 2026..... 7
4.2.1 Cable connections..... 7
4.3 Testing prior to use..... 8
5.0 Start up..... 8
5.1 Selecting mA output..... 8
5.2 Connecting OC 2026 to other equipment..... 8
5.3 Stops of operation..... 8
6.0 Setting of alarm limits..... 9
6.1 Alarms with normally closed contacts..... 9
6.1.1 High Alarm..... 9
6.1.2 Low Alarm..... 9
6.2 Alarms with normally open contacts..... 9
7.0 Calibration..... 10
8.0 Scalation..... 11
9.0 EU Declaration of conformity..... 12
10.0 Installation of OC 2026..... 13
11.0 Warning - SENSOR OS 2024..... 14
12.0 Sensor warnings..... 15
13.0 Contact information..... 16

1.0 General Information

1.1 Introduction

The oxygen control OC 2026 is designed to measure the contents of oxygen directly in the flue-gas.The measurement is done using a heated cell made of zirconium dioxide (ZrO2) placed with its active surface in direct contact with the flue-gas thereby eliminating the use of filters and pumps during flue-gas sampling. Futhermore the instrument is unaffected by changes in the flue-gas temperature.

1.2 Principle of function

The measuring instrument does not take an absolute but rather a relative measurement. The sensor constantly measures the contents of O**2** in the flue-gas and in this way the combustion is controlled and the contents of the harmful substances in the flue-gas will be minimized.

2.0 Instrument identification

The oxygen control system OC 2026, as standard, consists of :
1. Signal amplifier OC 2026
2. Cable for connection to the sensor, standard length 2.0m.
3. Wide band sensor OS 2024

3.0 Technical specifications

3.1 Wide band sensor OS 2024

The wide band sensor (**Fig.1**) is a complex and therefore very precise sensor, built as two tightly connected cells. The wall of the measuring cells consists of zirconium dioxide ZrO**2**, which is heated to about 780o C with the help of a heating element. The heater supply voltage is controlled, so the temperature of the sensor is kept at the operation point. During the water condensation phase the heater power is limited to avoid damage to the sensor's ceramic.



Insertion length - 29 mm
Cable length - 850 mm
Thread - M18x1.5
Exhaust gas pressure <
1.5 bar

Working temperature
Exhaust gas temperature - max.900oC
Ambient temperature 0 - 60o C

Calibration interval
6 months

3.2 Oxygen Control OC 2026, Fig.2

Indication:

1.0% - 20.9% O2

Displayed on a three-digit seven-segment display with light-emitting diodes.Press the MENU button for Program Mode (% character not displayed), and select:

Calibration:

1% (2%) O2 - light in LEDs 1% O2
20.9% O2 - light in LEDs 20,9% O2

Analog output:

0 - 20mA - light in LEDs 0-20mA
4 - 20mA - light in LEDs 4-20mA

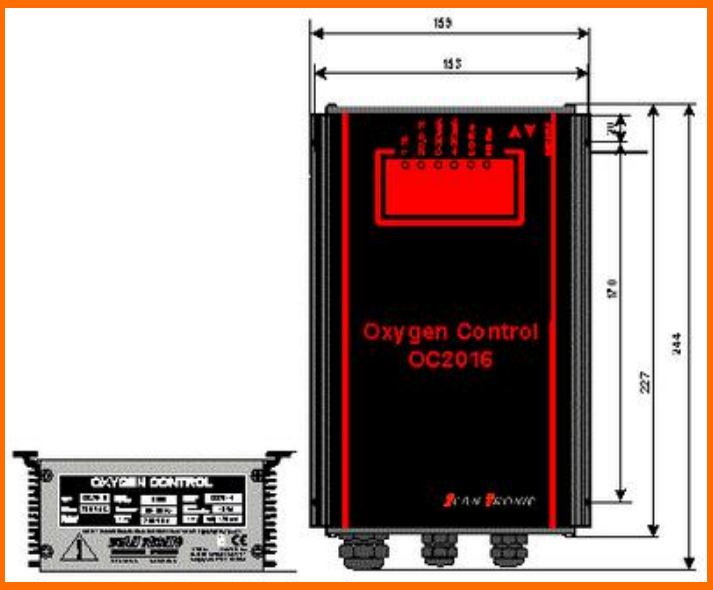

Maximum series resistor 600 Ohm.Maximum isolation voltage to ground 300 V DC.

Alarms:

Low alarm - light in LEDs **LO Re**
High alarm - light in LEDs **HI Re**
Potential free contacts, which are able to carry 6 A at 250 V AC.

The first relay contact opens below the O2 setpoint (LO-alarm).
The second relay contact opens above the O2 setpoint (HI-alarm).

Mains voltage connection

230 V -10 % / + 15 % 50/60 Hz

Power consumption

50VA in the heating period of the sensor (approx. 2 min.) hereafter max. 30 VA.

Cable connections:

M 16 cable glands 3pcs.
M 20 cable glands 1pcs.

Ambient temperature 0 - 60°C

Tightness - IP 54

Dimensions

Height: 244 mm
Width: 157 mm
Depth: 64.3 mm

Accuracy

Display: ± 1 on last digitCurrent output: <±0.2 % of max.signal

4.0 Installation

4.1 Installation of the sensor, Fig.3

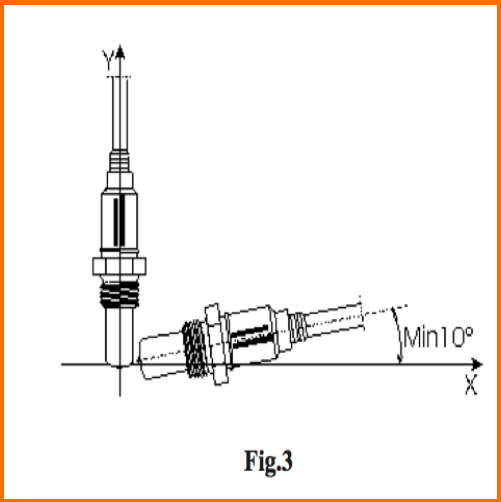

Fig.3

The sensor must be installed at minimum 10° relative to the horizontal -- best vertical mounting, to avoid any likely water accumulation within the sensor, Fig. 3.
Note!
The sensor itself must not be placed in its mounting thread before the flue gas duct installation has been completed and the burner is ready to start. Special warning against the cleaning and whitewashing of the boiler's flue-gas guidetube and heating surfaces while the sensor is installed. Generally, the oxygen meter must always be supplied with electricity; thus the sensor is heated when it is installed, and there is pressure/under-pressure at the measuring site.

1. The mounting place for the sensor should be chosen with regard to protecting the sensor against mechanical strain. The flue-gas temperature must be as hot as possible at the measuring site, but within the given limits (<930° C).
2. The flue-gas duct must be checked for holes and earlier leakages, and around the probe. Air entering from the surroundings affects measuring in a detrimental way.
3. The sensor reacts to changes in the concentration of oxygen (the oxygen's partial pressure), and to the absolute pressure at the measuring site. To keep the influence of the absolute pressure at a minimum, the sensor must not be mounted between a possible exhaust fan and its regulating damper, or in the immediate vicinity of these components. Under- or over- pressure must be kept under 100 mm water gauge. (H2O).
4. The sensor must be installed so that the surrounding temperature outside the flue-gas duct is kept between 0°C and 60°C.
5. Best distance between the oxygen meter OC2026 and the sensor is maximum 2.65 m.
6. The flue-gas that passes the sensor must be representative.
With a higher flue-gas duct cross section, a Scan Tronic flue-gas guidetube is used,**Fig. 4**.

The drawing, **Fig. 4**, shows the sensor and gas guidetube mounted in the flue-gas duct. In smaller flue-gas ducts (up to 300 mm) a M 18 x 1.5 mm threaded hole is cut in the wall of the flue gas duct. The sensor is installed directly into this.

Drawing , **Fig. 5**, shows a cut-out in the insulation and the holes that need to be made in the wall of the flue-gas duct to mount the flue-gas guidetube. The drawing is 1 : 1 and can therefore be used for marking up the holes.



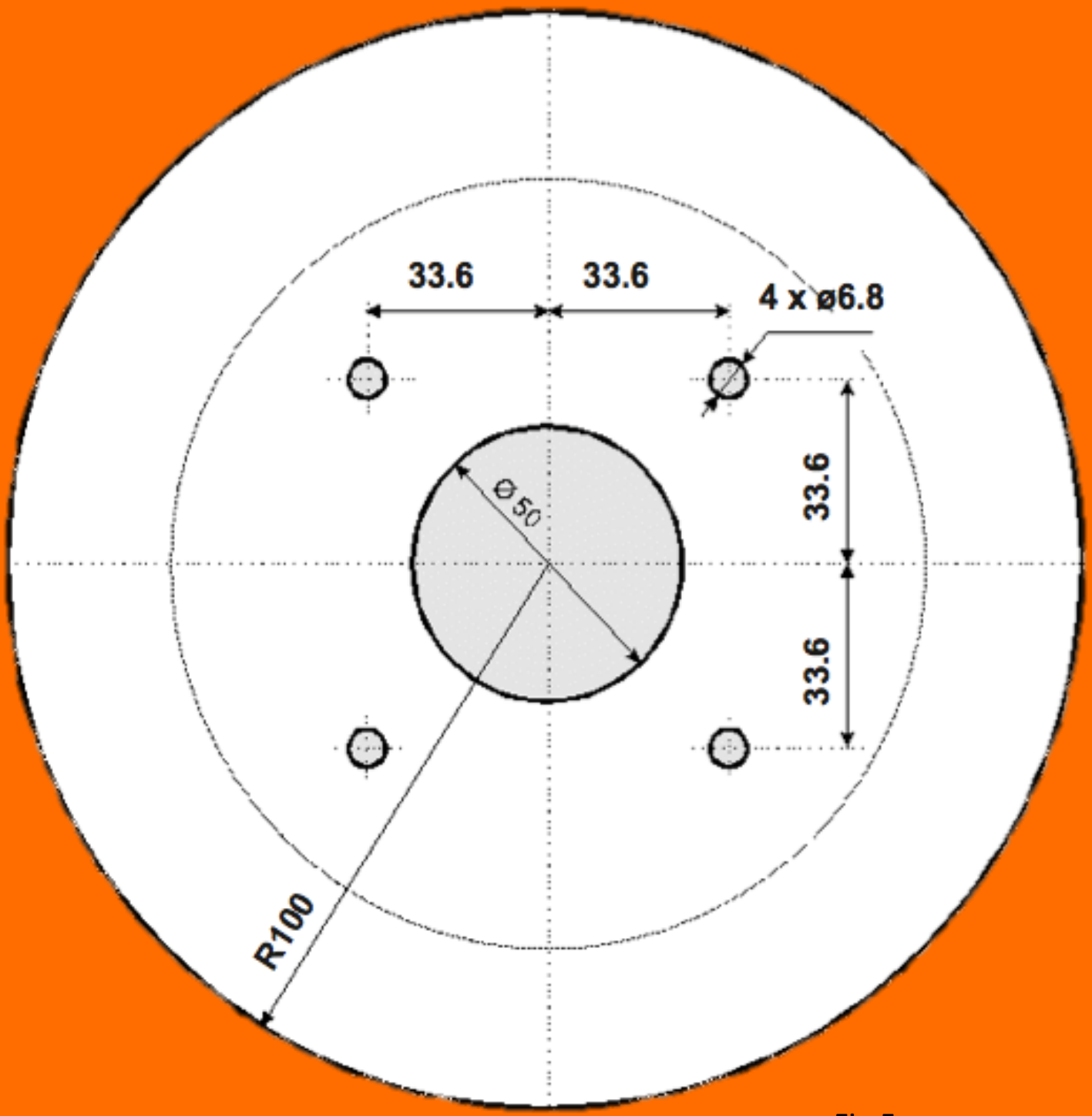

Fig.5

4.2 Installation of Oxygen Control OC 2026

The OC 2026 should be mounted at eye-level immediately below or near the sensor. The unit cannot be installed more than 2.6 meters away from the sensor.

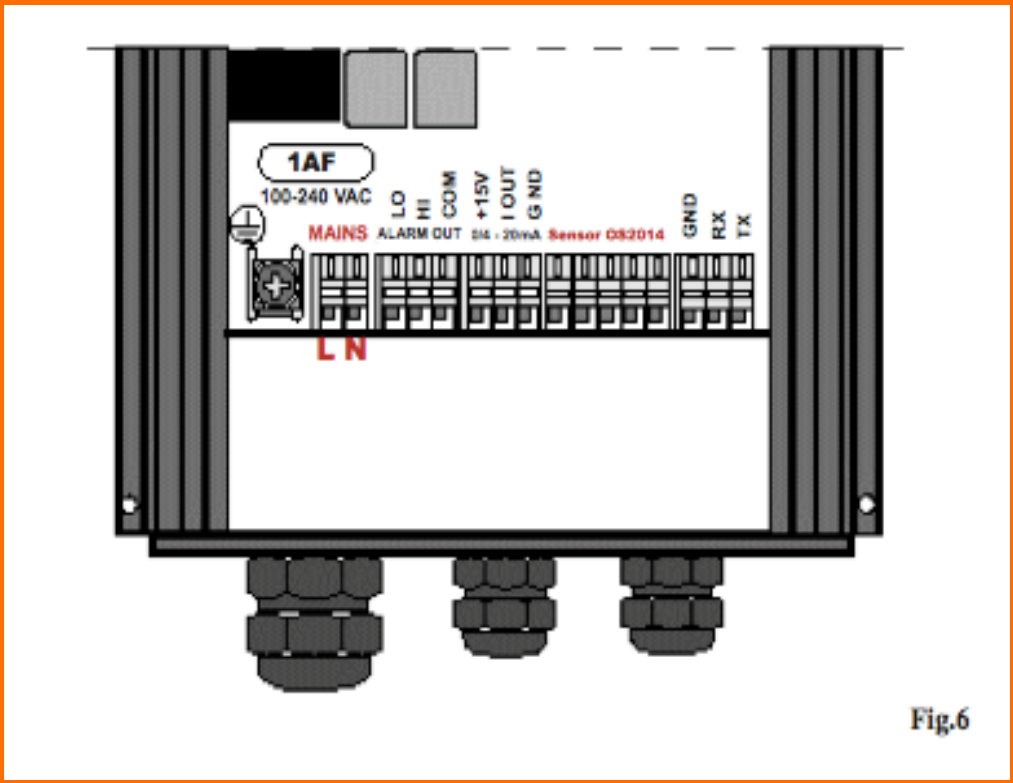

Fig.6

4.2.1 Cable connections, Fig.6

Supply wires to OC 2026 must be disconnectable by a separate switch in the panel.
Access to the connection terminals of the OC 2026 is obtained by removing the top- and front plate of the cabinet. All cables should be shielded.
1. Electricity supply, phase, zero, and earth, pass through the cable glands M20; largest fuse 10A.
2. The signal connection /the mA signal/ is passed through the cable glands M16. Use low voltage cable with screen..
3. Alarm connection /LO and HI / passes through the third cable gland (M16) (3 wires).
4. Connection to the sensor is achieved by joining the sensor's connector with the connector at the end of the cable, supplied with the oxygen meter.

Urgent:

The unit fulfils the **EU Low Voltage Directive**. This means that all cable connections must be executed accordingly. It is mandatory to use t he cable glands to secure the wires of the cables, leaving no excess cable length between clamps and terminals, and to use terminal-tubes/core-protectors if using multi-cord wires.

4.3 Testing prior to use

- Check that the sensor is installed in accordance with paragraph 4.1.
- Check that the sensor and the flue-gas guidetube are installed in accordance with paragraph 4.1
- Check that the OC 2026 is installed in accordance with paragraph 4.2
- Check that wire connections are carried out in accordance with the instructions given in paragraph 4.2.1.

5.0 Start up

- Mains voltage is connected to signal amplifier. The display will indicate **" LLL"** while the sensor is heating up. - While the sensor (during approx. 2 min.) reaches its operation temperature, the oxygen monitor will show a number of various oxygen concentrations, which will be stabilized when the sensor has reached its operation temperature.
- Optional recalibration, or test of calibration can be performed after 60 minutes. Calibration is carried out as described in paragraph 7.0.

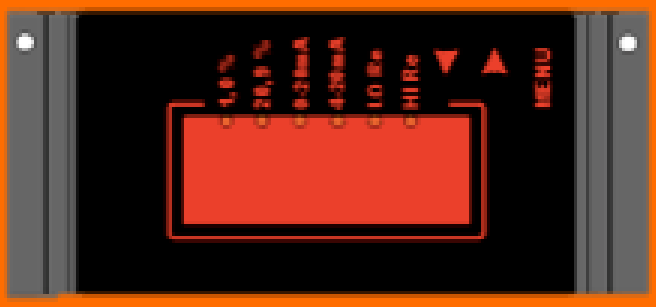

Factory Settings are 4-20 mA

5.1 Selecting mA output

0 - 20 mA

- Press **MENU** button for light in the light diode 4-20mA.
- Press the button ▼ and hold down for 2 seconds.
- The light diode 0 – 20 mA is now lit.

4 - 20 mA

- Press **MENU** button for light in the light diode 0-20mA.
- Press the button ▲ and hold down for 2 seconds.
- The light diode 4 – 20 mA is now lit.

5.2 Connecting OC 2026 to other equipment

The current loop output of OC 2026 is either 4 - 20 mA or 0 - 20 mA selected in accordance to chapter 5.4.
The loop is galvanically isolated from the internal circuits of OC 2026 within a range of maximal 300 VDC.

5.3 Stops of operation

Short stops of operation: less than 5 days, the mains voltage may remain connected if the operation stop does not imply any pollution of the sensor, as e.g. when the boiler is cleaned by whitewashing or high-pressure cleaning.
Long stops of operation: the mains voltage is disconnected and the sensor is dismounted from the flue and stored in protected surroundings.

6.0 Setting of alarm limits

6.1 Alarms with normally closed contacts

Alarm setting can be accessed by removing the top plate of the electronic unit.

6.1.1 High Alarm

The output relay will remain energized as long as the Oxygen value remains below the adjusted set point.

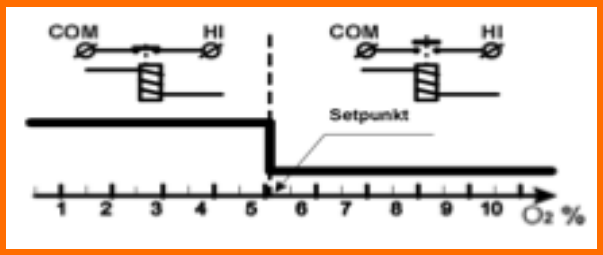

Setting:

- Press the **MENU** button several times until the diode **HI Re** begins to light.
- Set the alarm by using the ▲ and ▼ arrows, choosing the required value point on the Display.

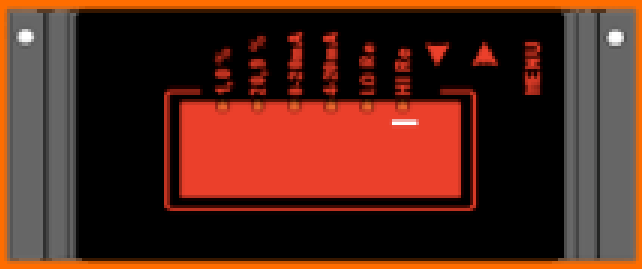

6.1.2 Low Alarm

The output relay will remain energized as long as the Oxygen value remains above the adjusted set-point. The output contact will remain closed as long as the relay remains energized.

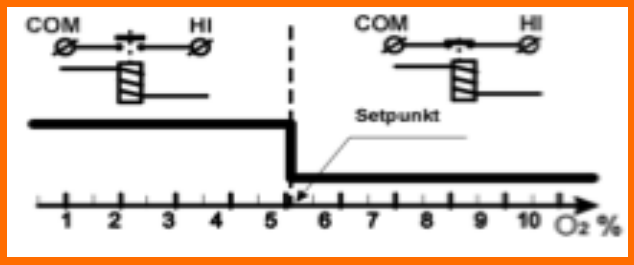

Settings:

- Press the **MENU** button several times until the diode **LO Re** begins to light.
- Set the alarm by using the ▲ and ▼arrows, choosing the required value point on the Display.

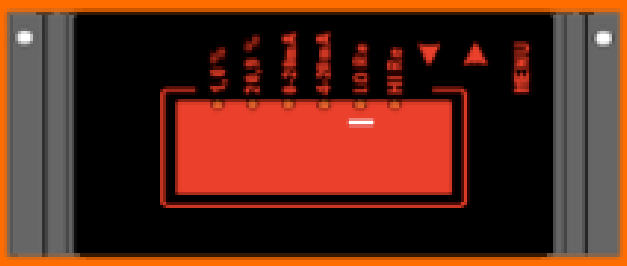

Internal alarms

When an internal error occurs in OC 2026, or power is not supplied to the unit, both **“HIGH“** and **“LOW“** alarm contacts open.
OC 2026 is monitoring the OS 2024 measuring cell and at cell error the **“LOW“** alarm relay contact will open.

6.2 Alarms with normal open contacts

Alarms with normal open contacts are not in the OC 2026.
When using alarms with normally open contacts, the **“HIGH“** and **“LOW“** alarm can beinterchanged. Please observe that no internal alarms can be given and no proper cell erroralarm can be expected.

7.0 Calibration

For a detailed informaation about calibration itself and the procedure of doing it , please contact directly your supplier.

8.0 Scalation

The current loop output of OC 2026 is either 4 - 20 mA or 0 - 20 mA selected according to chapter 4.3.
Selecting the 0 - 20 mA output, 1 % of oxygen equals one mA (1 : 1).
Selecting 4 - 20 mA 1 % of oxygen equals 0.81 mA (n x 0.81) + 4 .
Actual measuring range is limited to 1.0 % through 20.9 % using the under-range below 1.0 % as errror indication "LLL".
The corresponding output mA to oxygen values are shown in the graph below:

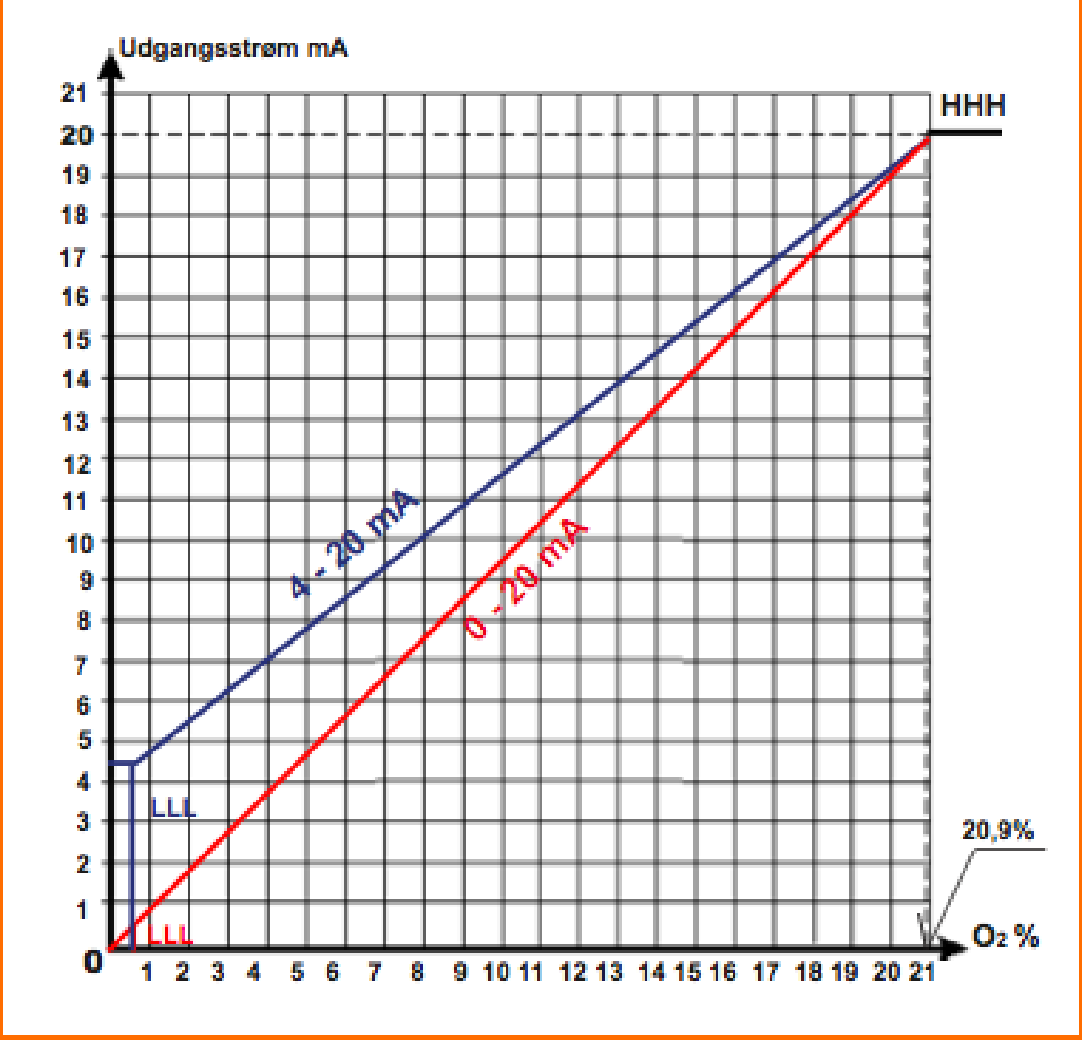

9.0 EU Declaration of conformity

SCAN TRONIC
COMBUSTION OPTIMIZING

Sveriesvej 16
8700 Horsens
Danmark

Phone +45 89614555
Mobile +45 21660085
CVR no. 25015886
www.scan-tronic.dk
info@scan-tronic.dk

9.0 EU Declaration of conformity

ScanTronic
Sverigesvej 16
DK - 8700 Horsens
Danmark

According to the requirements set out by directive 93/68/EEC
declare in sole responsibility that the products:

Oxygen control OC 2026

to which this certificate applies, conform to the
EMC directive 2004/108/EEC and its
amendments and conform to the Low voltage directive 2006/95/EEC

To effect correct application of the EMC directive the standards
EN 61000-6-4 and EN 61000-6-2 have been consulted.
To effect correct application of the Low voltage directive the standard
EN 61010-1 has been consulted.
Comply with EU Directive 2011/65/EU (RoHS II).

Ove Kudahl Munch, Director

signature

November,2016

date

Installation of OC 2026

The OS 2024 sensor is fitted top down in the flue-gas channel wall. In small channels a M18 x 1.5 mm threaded hole is prepared. In lager flue channels a guide tube is used. The OC 2026 is mounted at eye-level immediately below or near the probe.

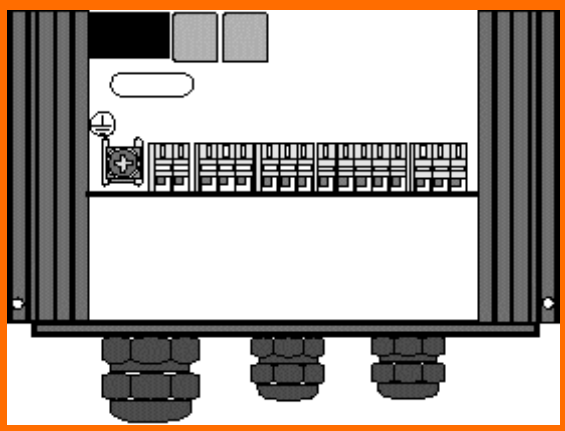

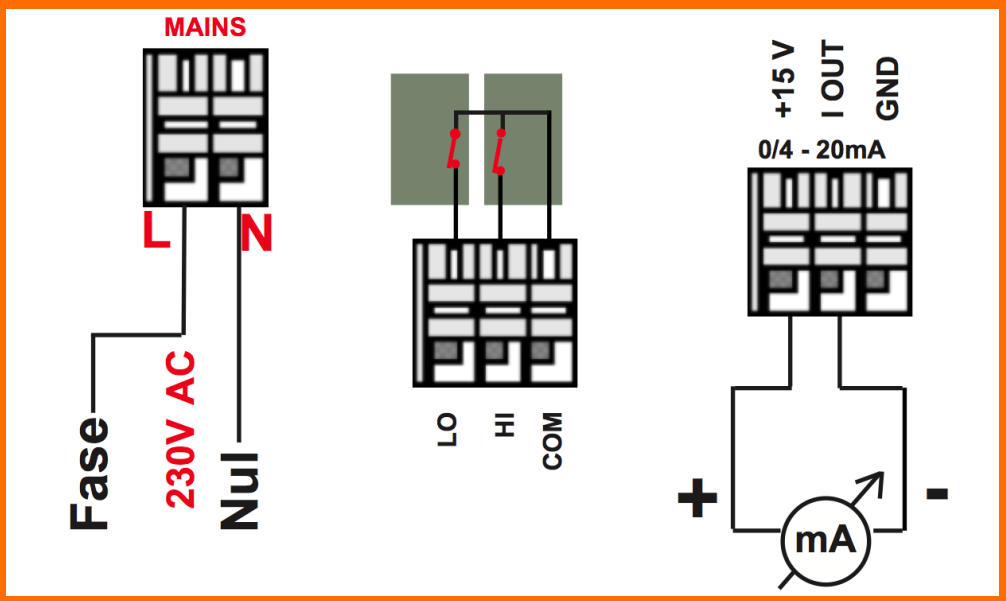

IMPORTANT!

The unit is tested to obtain a specification as having ”Approved Safety”, this means that all cable connections must be done accordingly. Therefore, please use the cable clamps to secure the wires of the cables and leave no excess cable length between clamps and terminals and use terminal-tubes/ core-protectors if using multicore wires. Supply wires to OC 2026 must be disconnectable by a separate switch in the panel.

Warning - SENSOR OS 2024

Mounting:

1. Handle the sensor with care, do not throw or drop it! Protect from mechanical strain! Ensure the assembly paste does not come into contact with the protection tube. The sensor is supplied with a pre-greased thread and protective cap.
2. The installation position should be vertically upwards, however at least at an angle of 10° with respect to the horizontal. This prevents the accumulation of liquid between the sensor housing and sensor element.
3. Remove the protective cap only shortly before installation.
4. Thread M18x1.5
5. Use open 22 mm box wrench or tool adapter.
6. Tightening torque: 40 - 60 Nm.
7. In a dusty flue-gas should be used Scan Tronic Flue-gas guidetube with filter nr.104.130.
8. In a large flue-gas channel /flue-gas without dust/ should be used Scan Tronic flue-gas guide tube nr.104.130.

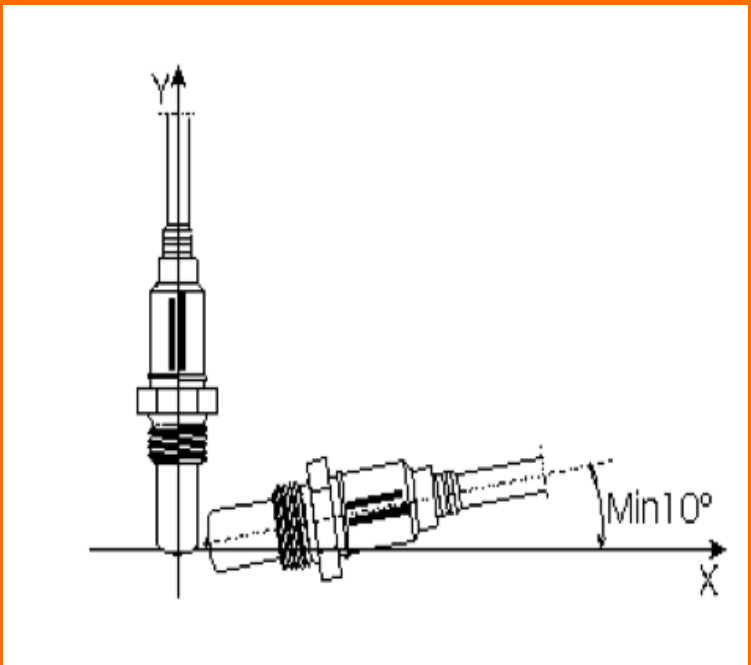



Warnings:

1. The sensor should not be exposed to an exhaust stream and left unheated.
2. Remove the sensor from the channel, if the sensor is disconnected for more than 10 minutes.
3. The sensor should be placed so it is not overheated (gas temp not above 750 °C, or cooled beyond the ability of the heater to maintain their working temperature (~ 10 Watts)
4. The sensors is pressure sensitive and should not be placed where the working gas pressure is much above or below atmospheric pressure / 1bar/.
5. The sensor warms up rapidly after switching. Once the sensor has warmed up, the occurrence of condensate could damage the hot sensor, therefore must be avoided.
6. The sensor should not be exposed to dust, lead, phosphorus, silicon, halogens or very high concentrations of sulfur.
7. The connector is essential for the function of the lambda sensor. For this purpose, protect the connector from any kind of soiling.

SCAN TRONIC
COMBUSTION OPTIMIZING



+45 21 66 00 85



info@scan-tronic.dk

SCAN TRONIC
COMBUSTION OPTIMIZING

Scan Tronic ApS
Sverigesvej 14
DK-8700
info@scan-tronic.dk
www.scan-tronic.dk