SCAN TRONIC
COMBUSTION OPTIMIZING

MODEL 252
VISIBLE EMISSION MONITOR



Technical Information
and User Guide

Scan Tronic ApS
Sverigesvej 14
DK-8700
info@scan-tronic.dk
www.scan-tronic.dk

VEM 252
Technical Information and Installation

Table of contents

1.0. SPECIFICATION..... 3
2.0. GENERAL DESCRIPTION..... 4
3.0. PRINCIPLE OF OPERATION..... 4
4.0. INSTALLATION AND COMMISSIONING..... 4
4.1 Installation of the panel-unit..... 5
4.2 Installation of the stack-units..... 6
4.3 Stack-unit alignment..... 7
5.0. PANEL-UNIT CALIBRATION..... 8
5.1 Sensitivity adjustment..... 8
5.2 Calibration menu, summary..... 8
5.3 Calibration menu - detailed description..... 10
6.0. BASIC OPERATING INSTRUCTIONS..... 13
6.1 Zero adjustment..... 13
6.2 Alarm setpoint adjustment..... 13
6.3 Alarm resetting..... 13
6.4 Alarm Test..... 13
6.5 Menu Keys..... 13
7.0. ERROR MESSAGES AND FAULT-FINDING..... 13
7.1 Error messages E1, E2, E3 and E4..... 13
7.2 Error message E5..... 14
7.2 Diagnosis of stack-unit wiring faults..... 14
8.0. MAINTENANCE..... 14
8.1 Routine maintenance..... 14
8.2 Recommended Spares List..... 14
APPENDIX 1 MAINS VOLTAGE CONVERSION AND ALARM OUTPUT RELAY CONVERSION..... 14
APPENDIX 2 PARTICLE DENSITY SAMPLING..... 15
APPENDIX 3 RELATIONSHIPS BETWEEN OPTICAL DENSITY, PARTICLE DENSITY AND OPACITY..... 16
APPENDIX 4 ALIGNMENT AID..... 18
APPENDIX 5 DIAGNOSIS OF STACK-UNIT WIRING FAULTS..... 19

1.0 SPECIFICATION

Panel-unit

Enclosure	DIN43700 case, 96 x 96 x 163
Supply voltage	Factory set to 115 or 230V ± 10% 50/60Hz ac
Power consumption	6VA
Display	4 character red LED display, 14.2mm high
Display modes	Selectable, one of three modes: Optical density 0 – 0.999 (displayed as 0 – 999) Particle density 0 – 999mg/m3
Opacity	0 – 100%
Stability	Typically better than ± 1% opacity or equivalent.
Ambient temperature	0 to 50°C (32 to 122°F)
Outputs:	
Alarm	Alarm relay output to switch externally powered warning device. Continuously variable setpoint, adjustable in any display mode. Manual, remote or automatic resets. Relay contacts factory-set to normally-open or normally-closed operation. Contacts rated at 2 amp 250V ac resistive. Alarm condition indicated by flashing display.
Analogue	4-20mA with independent drive selection from optical density, particle density or opacity. Maximum series impedance 600 ohms.
Digital	RS422/RS485 interface. Continuous data stream giving current display reading in ASCII format at 9600 baud..
Adjustments	All calibration and commissioning adjustments from front panel, with menu system and PIN tamper protection.
Auxiliary output board (optional extra)	Second 4-20mA output available on a separate plug-in PCB. Independent drive selection from optical density, particle density or opacity. Maximum series impedance 600 ohms..

Stack-units

Throw limits	0.3 to 6 metres
Ambient temperature	-10 to +60°C (14 to 140°F)
Emissions temperature	850°C maximum
Maximum cable length	100m from panel-unit
Cable type	6 core screened
Opto-devices	Solid-state emitter and sensors
Operating voltage	5V maximum
Mounting	Mount onto 76mm flanged extension tubes
Extension tubes	
Flange	Qty. 4 mounting holes Ø9mm on 120mm PCD
Tube	76mm (3”) OD
Material	Mild Steel, Painted semi-matt Black ,316/304 Stainless steel
Length	150mm or 300mm or 450mm

2.0 GENERAL DESCRIPTION

The SK Model 252 Emission Monitor is designed to measure dust and smoke discharge from industrial plant, and fullymeets the requirements of BS 2811 and BS 2740, satisfying most legal requirements for smoke and particulate emission monitoring.The instrument may be set to display optical density or opacity, and will also display particulate emissions when calibrated from isokinetic sampling results.
The unit comprises a digital Indicator control unit suitable for panel mounting, a transmitter and receiver unit complete with extension tubes for mounting to the flue or stack.

3.0 PRINCIPLE OF OPERATION

The instrument operates by projecting a visible beam of light generated by a light source within the transmitter unit across the smoke path and on to a solid state sensor housed in the receiver unit. This received light varies as particles passing through the light beam absorb and scatter the light, thereby reducing its intensity. A sensor in the transmitter monitors the light leaving the light source, and compensation is made for any variation the light output. This information is received by a micro-processor based control unit where the effects of ambient light are subtracted and the ratio of the remaining signals gives a stable drift freemeasurement of the beam strength. Additional calculations provide a direct reading in terms of dust density (mg/m3). Specific installation and flue conditions will require calibration against a specific measurement of solid emissions by the isokinetic sampling technique.

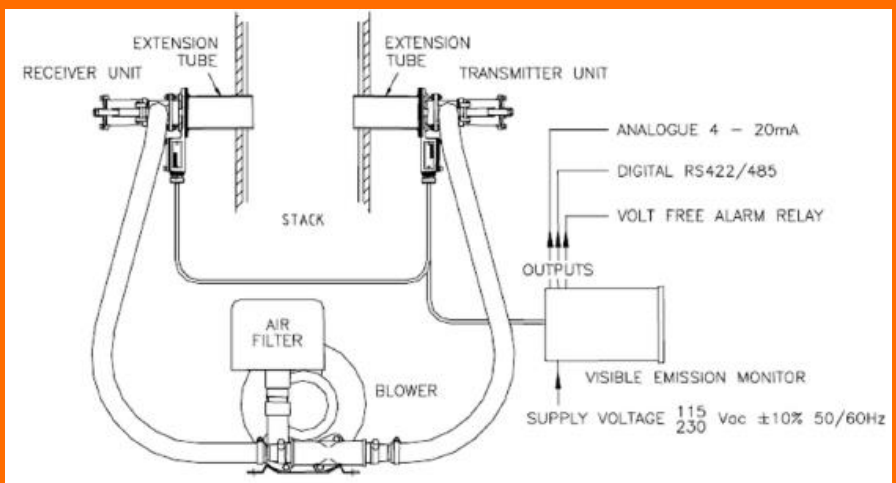

FIG.1 OPERATING PRINCIPLE

4.0 INSTALLATION AND COMMISSIONING

The following steps are required to establish basic operation:
1. Mount panel-unit and stack-units
2. Connect the panel-unit to at least:
a) the stack-units, using suitable screened cable
b) a mains input
3. Align the stack-units and set the panel-unit input sensitivity
4. Zero the instrument and verify normal operation
5. Set required modes of operation
6. Set required output alarm level

4.1 Installation of the panel-unit

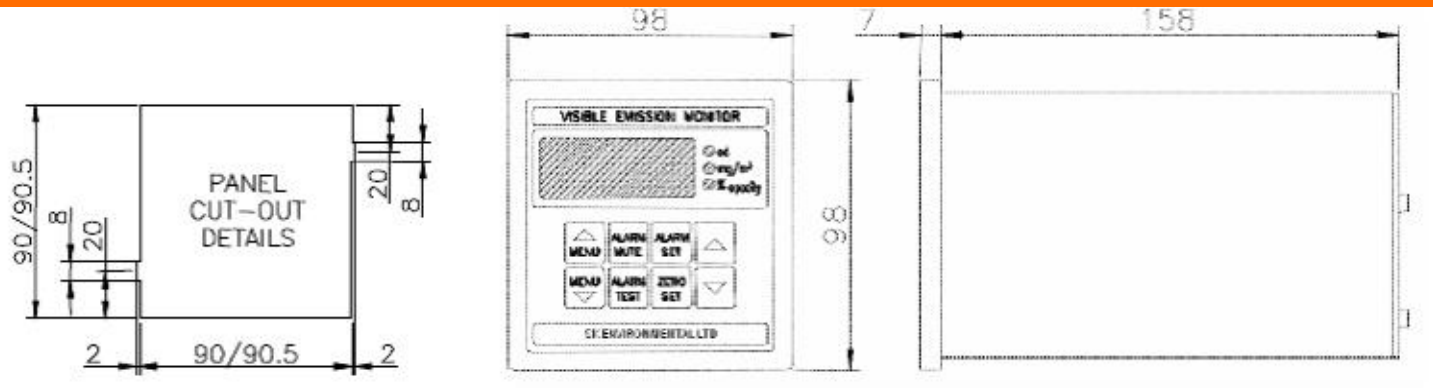

FIG.2 PANEL-UNIT AND CUTOUT DIMENSIONS

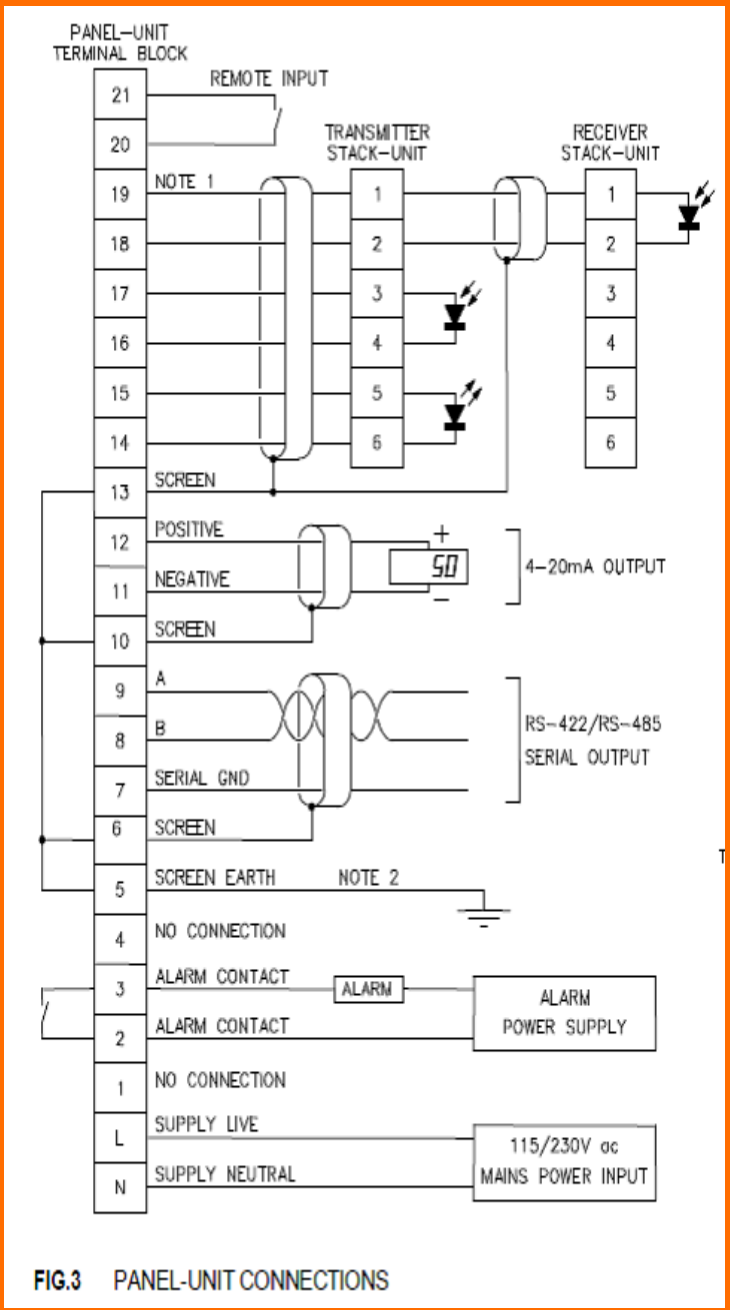

FIG.3 PANEL-UNIT CONNECTIONS

Notes:

1. Cables connecting the stack-unit to thepanel-unit MUST be screened, and the screen earthed (terminal 13). Cablemay be screenedmulticore, or mineral insulated, with the sheath used as the screen. These cables carry low-level signals, and should not be run parallel to power cables.
2. The screen earth (terminal 5) should be connected to an earth point as close to the panel-unit as possible.
3. The installer must ensure that all cables,particularly those carrying mains voltage, are adequately strain-relieved.

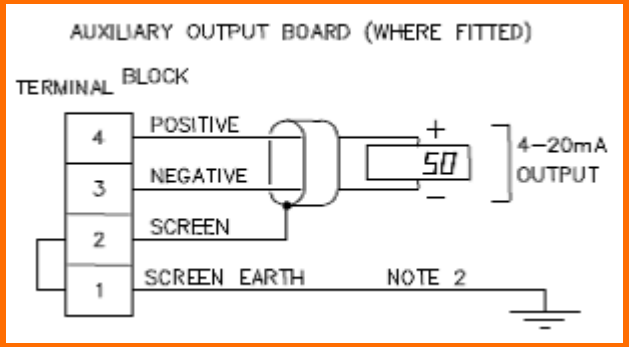

4.2 Installation of the stack-units

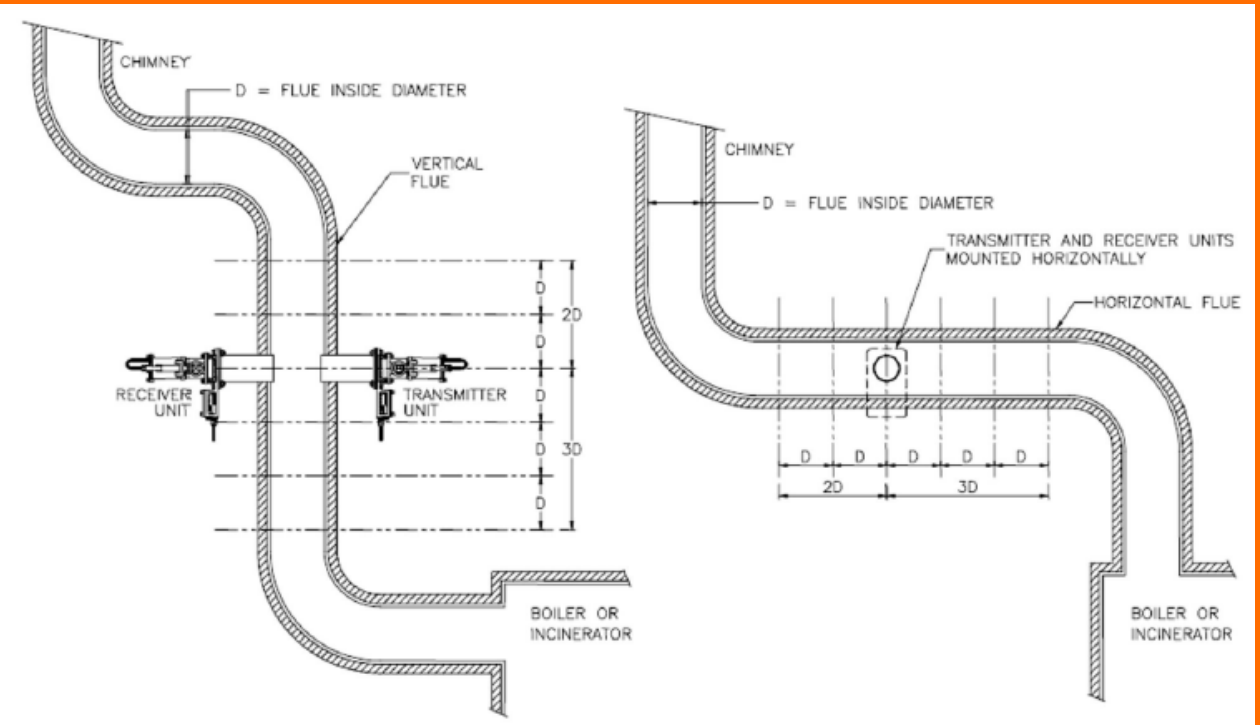

FIG.4 MINIMUM STACK UNIT INSTALLATION SPACING

Access should be available to both sides of the stack or flue, the transmitter and receiver units will require mounting independently and diametrically opposite each other.

The transmitter and receiver units should be installed in accordance with FIG.4 and the following guidelines:-

1. In a straight parallel section of flue away from bends and changes in diameter. Ideally they should be fitted in a vertical flue with at least 3 plain flue diameters before the units and 2 plain flue diameters after to ensure the smoke is uniformly distributed within the flue.
2. Where the temperature of the stack unit heads do not exceed 70°C. On applications where excessive temperatures are likely to be experienced, longer extension tubes are available to reduce radiated and conducted heat, alternatively adequate ventilation should be introduced.
3. Where distortion of the stack / flue due to temperature changes (particularly prominent in thin walled stack /flues) is either prevented or minimized as this will cause the transmitter and receiver units to loose the optimum alignment setting.
4. In a section of the stack / flue where flames, radiated heat and sparks are **NOT** present as these can interfere with the control unit readings by being detected by the receiver unit.
5. Maximum flue gas temperature:- with refractory 800°C without refractory 950°C
6. On installations where a negative flue pressure is present, remove the plastic red-cap fitted into the 1" BSP ports on both transmitter and receiver units. This allows air to be drawn through the stack-units to keep the lenses clean.

7. On installations where a positive pressure can occur, a pressurised clean air supply must be provided from either a blower or a compressor unit.
8. All blower units should have an inlet filter fitted, to protect both the impeller (which has very small running clearances) and also the stack-unit lenses. The blower unit should be installed as close to the stack-units as practical, with both hoses roughly the same length to give a balanced air supply.

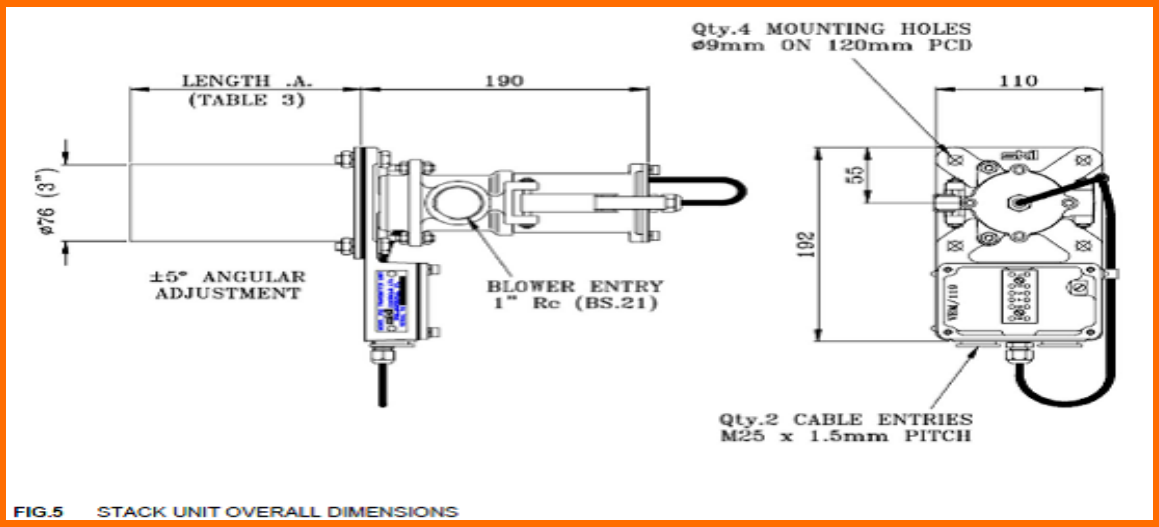

FIG.5 STACK UNIT OVERALL DIMENSIONS

4.3 Stack-unit alignment

For good instrument stability, proper alignment between the transmitter and receiver stack-units is essential. The first step is to ensure that the extension tubes are fitted to the stack directly opposite each other, and aligned as near as practical.
The stack-units are designed so that their alignment can be adjusted. The optical section can be swivelled vertically and horizontally over an angle of ±5°. Optimum alignment between the stack-units is achieved by adjusting both the transmitter and receiver units while monitoring the strength of signal at the receiver. This signal strength can be monitored in one of two ways, either by using a special alignment aid, or the panel-unit itself.

Aligning the stack-units without using the alignment aid

This procedure can only be used where the reading on the panel-unit can be observed while the stack-units are adjusted. If this is not the case, then the alignment aid must be used.
1. Place the panel-unit in calibration mode A. (Note: the PIN lock should be off, otherwise the display will keep returning to normal operation).
2. Slacken the three inner and three outer nuts on the holding the adjustable section of the transmitter. Move this section both up and down, and side to side until the reading on the display reaches a maximum. Note that if the reading exceeds 100, an error message (E1) will be displayed, and the sensitivity must be reduced using mode 21 (see the section on **sensitivity adjustment** for further details). As the optimum alignment point is found, hold the adjustable section in position and tighten the three ***outer*** nuts by hand so as to pull it against the baseplate.
3. Repeat stage 2 for the receiver stack-unit.
4. When optimum alignment has been achieved, tighten all inner nuts using a spanner.

Using the alignment aid to align the stack-units

See APPENDIX 4

5.0 PANEL-UNIT CALIBRATION

All internal adjustments are performed from the front of the instrument using a series of calibration and commissioning modes in a simple step-through menu. These modes are entered by pressing Menu▲ to enter at mode 1, or Menu▼ to enter at mode P.
Once in the menu system, pressing both menu keys together returns the instrument to normal operation.
Once a particular mode has been selected, the ▲ and ▼ keys are used to make adjustments. The modes are described below both as a summary and in more detail.
Unauthorised tampering with the calibration settings is prevented by a personal identity number (PIN) locking system. The instrument is supplied with the PIN lock off, i.e. adjustments are enabled. After the user / installer has invoked the PIN lock, adjustments may only be made if the lock is removed again by entering the correct PIN value. Mode P is used both to add and remove the lock. The calibration settings may be inspected at any time by simply selecting the appropriate mode. However, where the PIN lock is applied, no adjustments can be made, andthe display will show '--' if they are attempted.

5.1 Sensitivity adjustment

The following steps are required to match the receiver sensitivity to the stack conditions. It is assumed that the stack-units are mounted, and in reasonable alignment, and connected to the panel-unit using suitable screened cable. The stack should be clear for this adjustment.
1. Using the Menu▲ and Menu▼ keys, step through the menu modes until mode A is reached. The menu mode number or letter is shown to the left of the decimal point on the display. Where appropriate the setting for each menu item is shown on the right of the decimal point. In mode A, the value to the right of the decimal point indicates the receiver signal strength.
2. If the value to the right of the decimal point is between 20 and 70, no further action is required. To return the instrument to normal operation, press both Menu▲and Menu▼ keys together.
3. If the value to the right of the decimal point is less than 20, the sensitivity should be increased. To do this, press Menu▼ once, to reachmode 21. The selected range will be shown to the right of the decimal point, for example, in range 4, the complete display will read "21.r4". Use the ▲ key to select the next range up. Select mode A and return to stage 2 above.
4. If the value to the right of the decimal point is greater than 70, or the error message E1 (indicating input overload) is shown, the sensitivity must be reduced. To do this, press Menu▼ once, to reach mode 21. Use ▼ to select the next range down. Select mode A and return to stage 2 above.

5.2 Calibration menu, summary

The sequence of modes is 1 to 21, A, b, C, d, P and n.

Menu Item	Description	Display	Adjustment / Option
1	Display mode in normal operation	Od	Display optical density
		Pd	Display particle density
		OP	Display opacity
2	Time averaging filter	0-99	Raise or lower value
3	Set optical density in relation to particle density	0-999	Raise or lower value
4	Set particle density in relation to optical density	0-999	Raise or lower value
5	Set optical density display for full analogue output	0-999	Raise or lower value
6	Set particle density display for full analogue output	0-999	Raise or lower value
7	Set opacity display for full analogue output	0-100	Raise or lower value
8	Select mode required to drive analogue output no.1	Od	Drive analogue output no.1 from optical density
		Pd	Drive analogue output no.1 from particle density
		OP	Drive analogue output no.1 from opacity
9	Select mode required to drive analogue output no.2	Od	Drive analogue output no.2 from optical density
		Pd	Drive analogue output no.2 from particle density
		OP	Drive analogue output no.2 from opacity
10	Alarm setpoint lock	AJ	Alarm setpoint adjustable from front panel keys
		Lc	Alarm setpoint locked
11	Zero lock	AJ	Zero adjustable from front panel keys
		Lc	Zero locked
12	Display mode lock	AJ	Display mode in normal operation always adjustable
		Lc	Display mode locked
13	Alarm reset, manual/automatic	An	Manual alarm reset. Alarm is muted or reset by ALARM MUTE key
		Au	Automatic alarm reset. Alarm is automatically reset 5 seconds after reading drops below setpoint
14	Remote input, mute/zero	rA	Remote input alarm mute. Closing a switch connected to the remote input terminals (terminals 1 and 2) mute/resets the alarm
		r0	Remote input zero. Closing a switch connected to the remote input terminals (terminals 1 and 2) sets the display to zero. This should be done when the stack is known to be clear.
15	Alarm relay operation	no	Alarm relay coil is de-energised unless in alarm, used with 'normally open' contacts
		nc	Alarm relay coil is energised unless in alarm, used with 'normally closed' contacts
16	Alarm setpoints, adjust together/adjust separately	Hr	Alarm setpoints in all three display modes are adjusted together.
		EP	Setpoints are independently adjustable
17	Set analogue output no.1 zero		Raise or lower value
18	Set analogue output no.1 full-scale		Raise or lower value
19	Set analogue output no.2 zero		Raise or lower value
20	Set analogue output no.2 full-scale		Raise or lower value
21	Stack-unit receiver input sensitivity setting	1-8	Raise or lower value
A.	Signal strength measured at receiver, transmitter on.	0-99	No adjustment
b.	Signal strength measured at receiver, transmitter off.	0-99	No adjustment
C.	Signal strength measured at transmitter, transmitter on.	0-99	No adjustment
d.	Signal strength measured at transmitter, transmitter off.	0-99	No adjustment
P.	Enter personal identity number (PIN)	0-999	Raise or lower value
n.	Change PIN value	0-999	Raise or lower value

5.3 Calibration menu – detailed description.

1: Display mode in normal operation

The instrument may be set to read in any one of three display modes, optical density (Od), particle density (Pd) or opacity (OP). The optical density reading is x 1000, so a reading of 45 represents an optical density of 0.045. The mode selected to drive the display does not affect the mode selected to drive the analogue outputs.
The definitions of **optical density** (Dx) and **opacity** (Sx) used in this instrument are as defined in BS 2811 and BS 2740, i.e.

$$Dx = \log_{10} Io / Ix$$
$$Sx = 100\ (1 - Ix / Io)$$

Where Io is the original intensity before the medium is introduced and Ix is the intensity after passing through the medium.

2: Time averaging filter

Where a steady display reading is required and flue emissions are fluctuating, a time averaging filter may be applied. The filter settling time may be varied in stages between 0 and 100 seconds. The larger the value, the heavier the filtering effect. The filtering is applied to the analogue and digital outputs as well as the display.

3: Set optical density in relation to particle density, and
4: Set particle density in relation to optical density

The instrument measures the optical density of the medium in the stack. However, because the optical density varies in proportion to the particle density, it is possible to derive and display particle density from optical density. First, the relationship between these two must be determined, and this is achieved by (isokinetic) sampling of particle density while simultaneously logging optical density. Once this relationship is known, the figures may be entered using modes 3 and 4, and the instrument set to display in particle density. The setting of these two factors is best illustrated by example. Suppose a test result has yielded a relationship where an average optical density reading of 45 (0.045 x 1000) on the instrument has been produced by a particle density of 250mg/m3. The figures 45 and 250 should be entered into modes 3 and 4 respectively. The display mode may then be changed to read directly in particle density (see mode 1). Note though that in fact, the instrument will still be *measuring* in optical density, but multiplying the result by 250/45 for the display.
It is the relationship which is important, and not the actual values. Very low values for either factor should not be entered. For example it better to enter a relationship of 50/10 as 500/100.

5: Set optical density display for full analogue output
6: Set particle density display for full analogue output
7: Set opacity display for full analogue output

The maximum display reading in optical density and particle density is 999, and in opacity is 100. Very often, the operational range of interest is much less than these values. Modes 5,6 and 7 permit the user to select the display range over which the analogue (4-20mA) output is required to operate. For example, setting the value in mode 5 to 200 will cause the analogue output to operate from zero to full-scale over an optical density range of 0 to 200 (0 to 0.2 x 1000). All display values over 200 will keep the analogue output at fullscale. Modes 6 and 7 allow the same flexibility for particle density and opacity respectively.
Related modes: 8 and 9

8: Select mode required to drive analogue (4-20mA) output no.1

The analogue output no.1 (the standard output on the upper terminal block) may be driven from any of the three display modes, optical density (Od), particle density (Pd) or opacity (OP), and is independent of which mode is actually being displayed. For example, it is possible to display opacity, whilst driving the analogue output from the corresponding optical density value. Related modes: 5,6 and 7.

9: Select mode required to drive analogue (4-20mA) output no.2

A second analogue output is an optional extra, and where fitted is available on a second lower terminal block. Details as for mode 8.

10: Alarm setpoint lock

The alarm setpoint may be left adjustable at all times (AJ), or may be locked (Lc) to prevent tampering.

11: Zero lock

Zero setting may be left adjustable at all times (AJ), or may be locked (Lc) to prevent tampering.

12: Display mode lock

Normally, the display mode (mode 1) will be set as required and locked (Lc) in this setting once the PIN lock is evoked. If required however, this can be left adjustable (AJ), even when PIN protection is applied, so that the display mode can be changed at any time by the operator, using mode 1.

13: Alarm reset, manual/automatic
With this mode set to manual reset (An), once triggered, an alarm condition will be maintained indefinitely until the ALARM MUTE key is pressed. Set in the automatic mode (Au), the alarm resets itself 5 seconds after the reading drops below the alarm setpoint.
14: Remote input, mute/zero
The instrument has one set of terminals for a signal from a remote input. This may be used either as the ALARM MUTE key would be used to mute the alarm (rA), or to zero the instrument at times when the stack is known to be clear (r0).
15: Alarm relay operation
Under normal circumstances, in the event of an alarm, the alarm relay coil becomes energised, and the output contacts close. With no alarm present, the alarm output relay is de-energised, and the alarm contacts are open. Loss of mains power would not therefore generate an alarm. This mode of operation is indicated by 'no' on the display. Very occasionally, there may be requirement for fail-safe operation, where loss of mains power would be recognised as an alarm condition.
In order to select this mode of operation, it is necessary to change both the drive to the coil, and the relay contacts on the board. Drive to the coil may be converted to fail-safe operation by selecting 'nc' in mode 15. The change to the relay contacts from 'normally open' to 'normally closed' is described elsewhere in this manual.
16: Alarm setpoints, adjust together/adjust separately
With this mode set to 'together' (Hr), adjusting the alarm setpoint in one display mode will automatically alter the alarm setpoint in the other two display modes to the corresponding value. Set to 'separate' (EP), the different setpoints may be set independently for each display mode. The instrument will only respond to the setpoint of the currently selected display mode.
17: Set analogue output no.1 zero
18: Set analogue output no.1 full-scale
These modes are used to calibrate the 4-20mA analogue output. In order to perform the calibration, it is necessary to monitor the current output using a suitable (digital multi-) meter connected to the output terminals. The value of the output displayed on the meter in mode 17 will be the value which corresponds to zero on the display. It may be adjusted using ▲ and ▼ , while observing it on the meter. It will normally be set to 4mA, but may be set to any value within the 0-20mA range that is less than the full-scale value. Note that if the current it is to be set to 0mA, this should be slowly approached from a positive value of current, and adjustment stopped when 0mA is just reached. If adjustment is continued past this point, the output meter will still read 0mA because the output cannot produce a negative current, but a calibration error will be introduced.
Mode 18 is similarly used to set the full-scale value of the output, usually to 20mA, but this can be any value in the 0-20mA range above the zero value. Note though that the resolution of the output is under 10 bits for the full 20mA, so any reduction in range utilised will result in coarser steps. ▲ and ▼ are again used for adjustment. Zero and full-scale adjustments are independent. Related modes: 5,6 and 7.
19: Set analogue output no.2 zero
20: Set analogue output no.2 full-scale
Where a second analogue output is fitted, this may be calibrated in a similar way to the standard analogue output, but using modes 19 and 20 in place of modes 17 and 18 respectively.
21: Stack-unit receiver input sensitivity setting
The distance between stack-units varies from on installation to another. To compensate for this, the sensitivity of the input from the stack-unit receiver can be varied. Mode 21 is used to set that sensitivity. There are 8 ranges, with range 1 being the least sensitive. This mode is used in conjunction with mode A, and its use is described in more detail in the section on *sensitivity setting*.
A, b, C and d: signal strength modes
These are display-only modes, so no adjustments can be made from them. They display signal strengths at the receiver and transmitter stack-units as a value between 0 and 100, and are used for commissioning and fault-finding. Where the signal strength exceeds 100 for any given mode, an error message, E1 to E4 respectively will be displayed, indicating that the relevant input is overloaded.
A: Signal strength measured at receiver, transmitter on.
Displays the strength of the light signal detected at the receiver stack-unit when the transmitter stack-unit light source is turned on, i.e. signal + ambient. It is used in conjunction with mode 21 to set the receiver input sensitivity (see section on *sensitivity setting*). A display of E1 indicates that the input exceeds 100, and is overloaded. In this case, the sensitivity should be reduced (mode 21).

B: Signal strength measured at receiver, transmitter off.
Displays the strength of the light signal detected at the receiver stack-unit when the transmitter stack-unit light
source is turned off, i.e. ambient only. A display of E2 indicates that the input exceeds 100.
c: Signal strength measured at transmitter, transmitter on.
Displays the strength of the light signal detected at the transmitter stack-unit when the transmitter stack-unit
light source is turned on, i.e. signal + ambient. A display of E3 indicates that the input exceeds 100.
D: Signal strength measured at transmitter, transmitter off.
Displays the strength of the light signal detected at the transmitter stack-unit when the transmitter stack-unit
light source is turned off, i.e. ambient only. A display of E4 indicates that the input exceeds 100.
P: Enter personal identity number (PIN)
The PIN locking system is used to prevent unauthorised adjustment of settings used in the instrument. The
settings may be examined at any time by stepping through the modes using the menu keys. However, any
attempt at adjustment of a setting will not be possible, unless the PIN protection is unlocked. Mode P enables
the user who knows the PIN to remove the lock. Once removed, the lock will remain off until it is re-applied.
On entering mode P, the display will indicate either 'Lc', indicating that adjustments are locked, or 'AJ' indicating that they are available.
The default (factory set) value for the PIN is369. Mode n shows how this can be changed.
To remove the PIN lock:
1. Select mode P
2. Use ▲ and ▼ to set the display to the PIN value
3. Press Alarm Mute .
4. If the entered PIN value is correct, the display will show 'AJ', indicating that the lock has been removed.
Do not press ▲ or ▼ again, as this will re-apply the lock. Instead, use Menu ▲ and menu ▼ to step to the menu items requiring adjustment.
5. If the entered PIN value is incorrect, the display will show 'Lc'. Further attempts at entering the PIN value may be made. After a number of attempts, a delay timer will be introduced, indicated by 'dL' on the display. This will prevent further attempts being made for a 5 minute period, and its purpose is to prevent the PIN from being discovered by trial and error.
To re-apply the PIN lock:
1. Select mode P
2. Press either ▲ or ▼ once.
3. The display will show 'Lc'.
n: Change PIN value
This mode enables the user to enter a new PIN value, provided that the PIN lock is removed (see mode P)
To enter a new PIN value:
1. Select mode n. Display will show Pn1.
2. Use ▲ and ▼ to select the required new PIN value.
3. Press Alarm Mute . The display will show Pn2
4. Repeat stages 2 and 3.
5. If the entered values are the same, the display will show 'Acc', indicating that the new value has been accepted.
6. If the entered values are different, the user is returned to stage 1 of this sequence.

6.0 BASIC OPERATING INSTRUCTIONS

6.1 Zero adjustment

Press and hold Zero Set . This will cause the leftmost digit on the display to flash “0”. To set the display to zero, additionally press ▲ and ▼ keys (3 keys together).
To set the display to any other value, press and hold Zero Set , and use the ▲ or ▼ keys to set the required value.
Scrolling will speed up the longer the keys are held.

6.2 Alarm setpoint adjustment

Press and hold Alarm Set . This will cause the leftmost digit on the display to flash “A”, and the current alarm setpoint value will be shown. Use the ▲ or ▼ keys with Alarm set to set the required value.
Scrolling will speed up the longer the keys are held.

6.3 Alarm resetting

When the alarm setpoint has been continuously exceeded for 5 seconds, the alarm will trip. This activates the alarm relay, and causes the display to flash.
Pressing Alarm Mut accepts the alarm. This resets the alarm relay, thereby silencing any externally connected device. The display will continue to flash until the reading drops below the alarm setpoint.

6.4 Alarm Test

Pressing and holding Alarm test simulates complete blockage of the optical path by turning off the transmitter light source. After 5 seconds, the alarm output relay is activated, and the display will flash. The alarm may be reset by pressing Alarm Mute .

6.5 Menu Keys

Full details of the use of these keys are given in the sections 5.2 and 5.3 covering the **calibration menu**. If the calibration modes are accidentally entered, pressing Menu ▲ and Menu ▼ together restores the display to normal operation.

7 ERROR MESSAGES AND FAULT-FINDING

7.1 Error messages E1, E2, E3 and E4

Error messages E1 or E2 indicate that panel-unit input from the receiver stack-unit is overloaded. Similarly E3 or E4 indicate an overload at the input from the transmitter stack-unit. The exact meaning of these error messages is described in section **5.3 Calibration menu – detailed description**, modes A,b,C and d.

Overloads are generally caused in one of three ways:
1. Sensitivity set too high. The sensitivity of the input from the receiver stack-unit is adjustable. If this is set too high, error messages E1 or E2 will be displayed. Section **5.1 Sensitivity adjustment** describes how this may be adjusted.
2. Wiring error. If error message E1 to E4 persists with the sensitivity turned right down, the most likely cause (during commissioning) is a wiring error in the form of crossed, open or short circuited wires between the panel-unit and stack-units. In this case the wiring should be checked (see APPENDIX 5). The use of unscreened cable between the panel-unit and stack-units has also been found to cause such messages.
3. Increase in ambient light reaching one of the stack-units. With the sensitivity correctly set, there is a certain amount of ambient light which will be accommodated. If this is exceeded, an error message will be shown. In this case, it may be necessary to reduce the sensitivity to the next lower range. Only the sensitivity from thereceiver stack-unit can be adjusted.

7.2 Error message E5

This indicates that the light from the light-source in the transmitter has fallen below its normal working level.Light from this source is measured by a sensor in the transmitter, and the light level may be examined by entering commissioning mode C. If the reading in this mode falls below 10, error message E5 will be displayed. This could be caused by:

1. Wiring error. Themost frequent cause of error message E5 being shown is a wiring error between the panel-unit and the transmitter stack-unit, as describe in item 2 above.
2. Failing or damaged light-source or light sensor in the transmitter.

7.2 Diagnosis of stack-unit wiring faults

See APPENDIX 5

8.0 MAINTENANCE

The emission monitoring equipment will give free service for long periods, with little maintenance, if properly installed and fitted with a suitable clean air supply on all installations where a positive stack pressure can occur.

8.1 Routine maintenance

3 monthly intervals

Clean the transmitter and receiver lenses with a clean soft cloth by releasing the over-centre fastener and swinging the units body through 900.

6 monthly Intervals

After cleaning the lenses, re-check the instrument zero setting with clear stack conditions.

If the unit is fitted with a blower unit, clean or replace the inlet air filter element.

8.2 Recommended Spares List

	Qty	Part No.
Transmitter and Receiver O-ring kit	1off	VEM/A119-K
Transmitter PCB and lead	1off	VEM/A130
Receiver PCB and lead	1off	VEM/A131
Lenses	2 off	90-F1559
Blower Filter Element (when fitted)	1off	90-MFCP-1.5PL

APPENDIX 1 MAINS VOLTAGE CONVERSION AND ALARM OUTPUT RELAY CONVERSION

Mains voltage 230V / 115V conversion



To convert from 230 volt to 115 volt, locate links 1 to 3 on the bottom of themain printed circuit board. Cut and completely remove the link across LK1. Solder a short length of wire across both LK2 and LK3.

Alarm output relay normally-open / normally-closed conversion



To convert from normally closed to normally open operation, locate links 4 and 5 on the bottom of themain printed circuit board. Cut and completely remove the link across LK5. Solder a short length of wire across LK4.

APPENDIX 2 PARTICLE DENSITY SAMPLING

The Model 252 Visible emission Monitor measures OPTICAL density. It is able to display PARTICLE density by scaling the optical density once the relationship between the optical and particle density is known. An example of this relationship is given in Appendix 1. Variations in flue geometry and emission composition however, mean that the only method of determining this relationship, which is likely to be acceptable to the regulating authorities, is by taking emission samples while simultaneously recording optical density and correlating the two.

Once figures from the emission sampling and corresponding readings of optical density are available, they are easily entered into the monitor (see **calibration menu**, modes 3 & 4), which can then be switched to display particle density directly (see **calibration menu**, mode 1).

Sampling procedures are described in British Standards BS 34051 and BS 8932. Both standards describe a process whereby emission samples are drawn off from the flue and weighed. BS 893 requires a greater number of samples to be taken, and hence the expected accuracy is better, being ± 10%, as compared with ± 25%, for BS 3405. Sampling as described is quite a complex procedure, involving specialised equipment and expertise and would generally be undertaken by a specialist contractor (contact SK Sales office for details).

Preparations for Sampling

1. Emission Monitor

Before arrangements for sampling are made the monitor should be installed and operating optimally, with the stack-units properly aligned and the sensitivity adjusted as described under **sensitivity adjustment**. It should be operating in the **optical density (od)** mode. Immediately prior to the sampling session, the stack-unit lenses should be cleaned and the monitor zeroed **with no emissions present**.

2. Recording Device

The recording device can range from a simple chart recorder to a data logger and is connected to the emission monitor via the analogue (4-20mA) output. Since for each sampling period (of which there will be a number) an average figure of optical density must be produced, the most convenient device would be one which can provide an average figure for the recording period. A data logger with this facility is thus ideal. Alternatively, with a chart recorder, the area under the curve for the sampling time may be manually converted to an average in a number of ways.

The output of the monitor to the recording device should be adjusted so that an appropriate range of optical density is recorded. If, for example, the observed range in optical density (x 1000) for the installation is 30 to 70, then the monitor could be adjusted so that the analogue output produces a full scale output swing (4 to 20mA) for the recording device over a display reading of 0 to 100. See **calibration menu,** mode 5 for how to do this. The monitor display and recorder should be checked for agreement at zero and full-scale.

1 BS 3405:1983 Measurement of particulate emission including grit and dust (simplified method).
2 BS 893:1978 Measurement of the concentration if particulate material in ducts carrying gases.

APPENDIX 3 RELATIONSHIPS BETWEEN OPTICAL DENSITY, PARTICLE DENSITY AND OPACITY

IMPORTANT NOTE: The figures for particle density are given for guidance only. They are calculated from an example where, over a 1 metre throw, 250 mg/cubic metre of smoke produces an optical density of 0.045. This will not be true of all types of emission or installations and this relationship can only be established by sampling

Table 1. Values of Ix from 1 down to 0.1 in steps of 0.1

Ix	Io/Ix (Io = 1)	Dx	Particle density	% Opacity
1	1	0	0	0
0.9	1.11	0.045	250	10
0.8	1.25	0.096	529	20
0.7	1.43	0.154	846	30
0.6	1.67	0.221	1212	40
0.5	2	0.301	1645	50
0.4	2.5	0.397	2174	60
0.3	3.33	0.522	2857	70
0.2	5	0.698	3819	80
0.1	10	1	5464	90

Table 2. Values of Ix from 1 down to 0.9 in steps of 0.01

Ix	Io/Ix (Io = 1)	Dx	Particle density	% Opacity
1	1	0	0	0
0.99	1.01	0.004	24	1
0.98	1.020	0.008	48	2
0.97	1.03	0.013	72	3
0.96	1.04	0.017	97	4
0.95	1.05	0.022	122	5
0.94	1.06	0.026	147	6
0.93	1.07	0.031	172	7
0.92	1.09	0.036	198	8
0.91	1.10	0.04	224	9
0.9	1.11	0.045	250	10

Where:
Io = Strength of received signal with a clear path, here set to 1.
Ix = Strength of received signal with emissions present.
Dx = log10 Io /Ix = Optical density for emission of thickness x
Particle density is in mg/cubic metre.

Effect of path length

Where a metre path length of smoke produces an optical density of 0.05, varying the path length will have the following
effect:

Path length (metres)	Optical density
1	0.05
0.5	0.025
2	0.1

APPENDIX 3 (continued)

Relationship between optical density, particle density and opacity

The emission monitor calculates optical density as:

$$\log_{10} \frac{\text{Light received when instrument zeroed (Io)}}{\text{Light received when instrument read (Ix)}}$$

It calculates opacity as: $100\left(1 - \frac{\text{Light received when instrument read (Ix)}}{\text{Light received when insrument zeroed (Io)}}\right)$

Stack clear, instrument zeroed

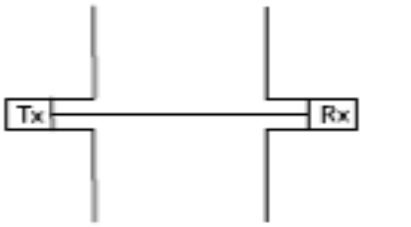

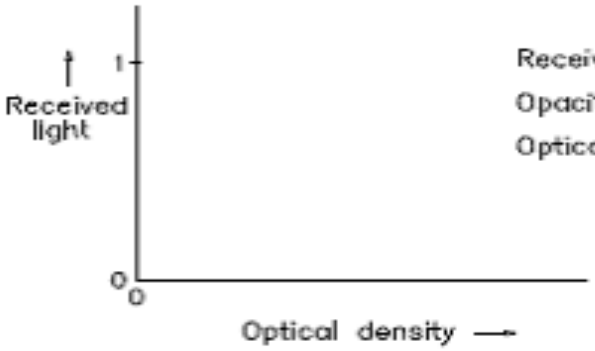

Received light = 1
Opacity = 0
Optical density = 0

n mg/cubic metre

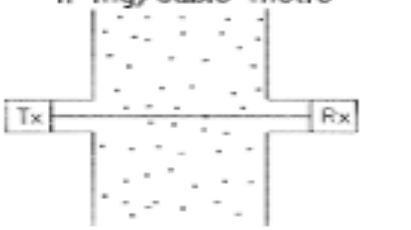

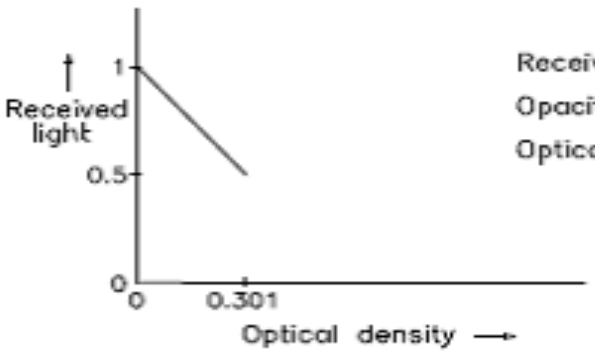

Received light = 0.5
Opacity = 50%
Optical density = 0.301

2n mg/cubic metre

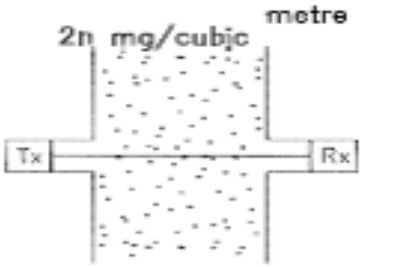

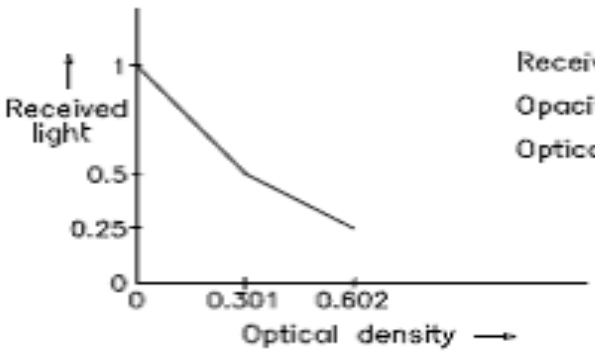

Received light = 0.25
Opacity = 75%
Optical density = 0.602

3n mg/cubic metre

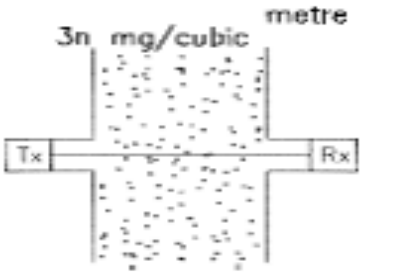

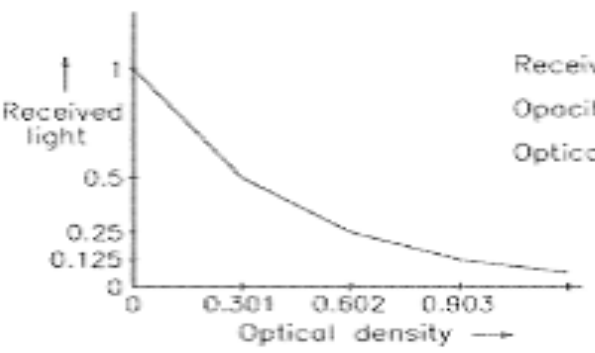

Received light = 0.125
Opacity = 87.5%
Optical density = 0.903

APPENDIX 4 ALIGNMENT AID

To assist with commissioning, an electronic alignment aid, VEM/A118 may be used. This is a battery powered device which produces an output voltage which is proportional to the light reaching the stack-unit receiver. It also provides power to the transmitter light source which can be switched on and off.

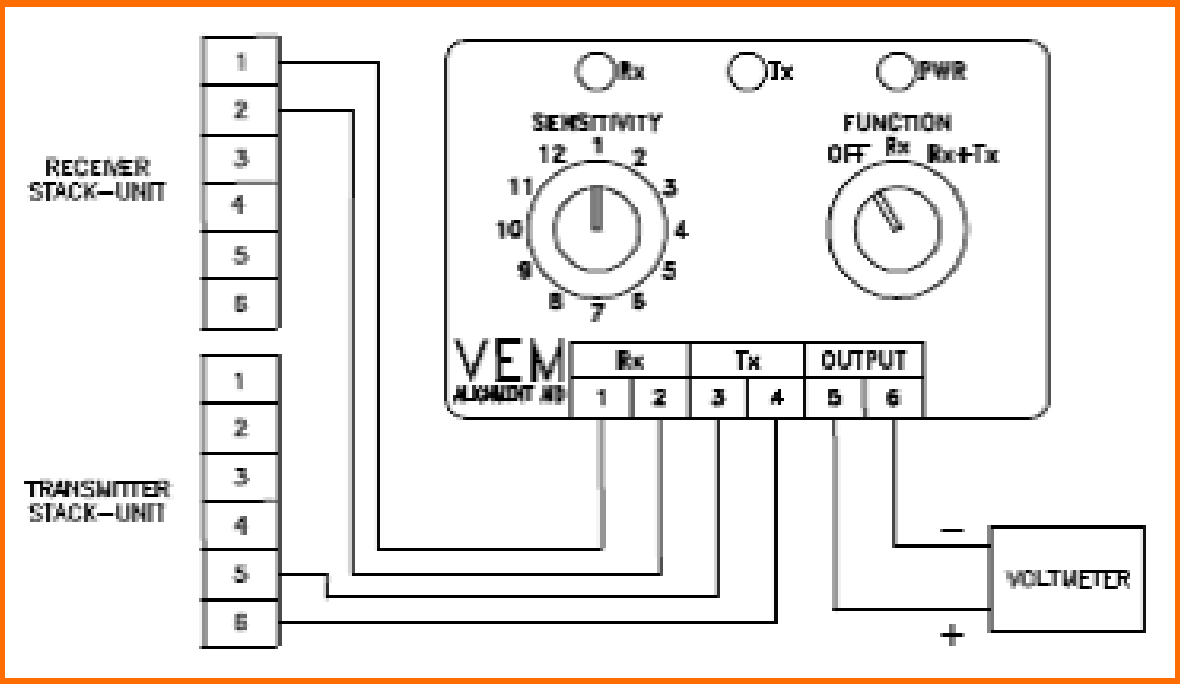

Instructions for use

1. Disconnect any existing stack-unit wiring. Connect the alignment aid as shown in such a way that the voltmeter can be seen from both the transmitter and receiver units.
2. Turn the function switch fully clockwise to switch the power and transmitter on.
3. Rotate the range switch clockwise to increase the sensitivity until the voltage on the meter reads between 1 and 5 volts. If this cannot be attained on any range, slacken the three inner and three outer nuts on the holding the adjustable section of the transmitter. Move this section up and down and from side to side until a reading is obtained.
4. Continue alignment of the transmitter to maximise the meter reading. As the reading approaches 5 volts (maximum output), turn the range switch anticlockwise to reduce sensitivity. Continue this procedure until the meter reading is at a maximum ***on the lowest sensitivity range setting that can be achieved***. As the optimum alignment point is found, hand tighten the **outer** nuts to hold the unit in position, and to pull the adjustable section against the baseplate.
5. Repeat procedure 4 for the receiver unit.
6. When optimum alignment has been achieved, tighten all inner nuts using a spanner.

APPENDIX 5 DIAGNOSIS OF STACK-UNIT WIRING FAULTS

Wiring and routing

1. Check that screened cable has been used for the stack-unit signals, and that screens are earthed.
2. If signal cables are routed together with “dirty” power cables, re-route them so that they are no longer parallel. Where such cables are encountered, they should be crossed at 90°.

Testing

1. Remove power from the panel-unit.
2. Pull the rear connector off the panel-unit.
3. Connect a digital multimeter (DMM) set on “diode test” or “resistance” to the receiver stack-unit as shown in figure 4, with positive on terminal 1 and negative on terminal 2. If using resistance, check the meter response on various ranges until the meter indicates the normal diode drop of a few hundred millivolts. Connecting the meter the “wrong” way round should produce an over-range response, as in figure 2.
4. Repeat the test at the panel-unit connector (not the panel-unit itself), as in figure 5, with positive on terminal 19, and negative on terminal 18. The result should be the same as above, since these points should be connected together. If not, then check for reverse polarity, or a missing connection.
5. Repeat the same test for the transmitter stack-unit. Note however that not all multimeters can cope with the higher voltage drop produced by the light source.

As a last resort, the stack-units should be removed from the stack and wired locally to the panel-unit to eliminate the possibility that a system component is at fault.

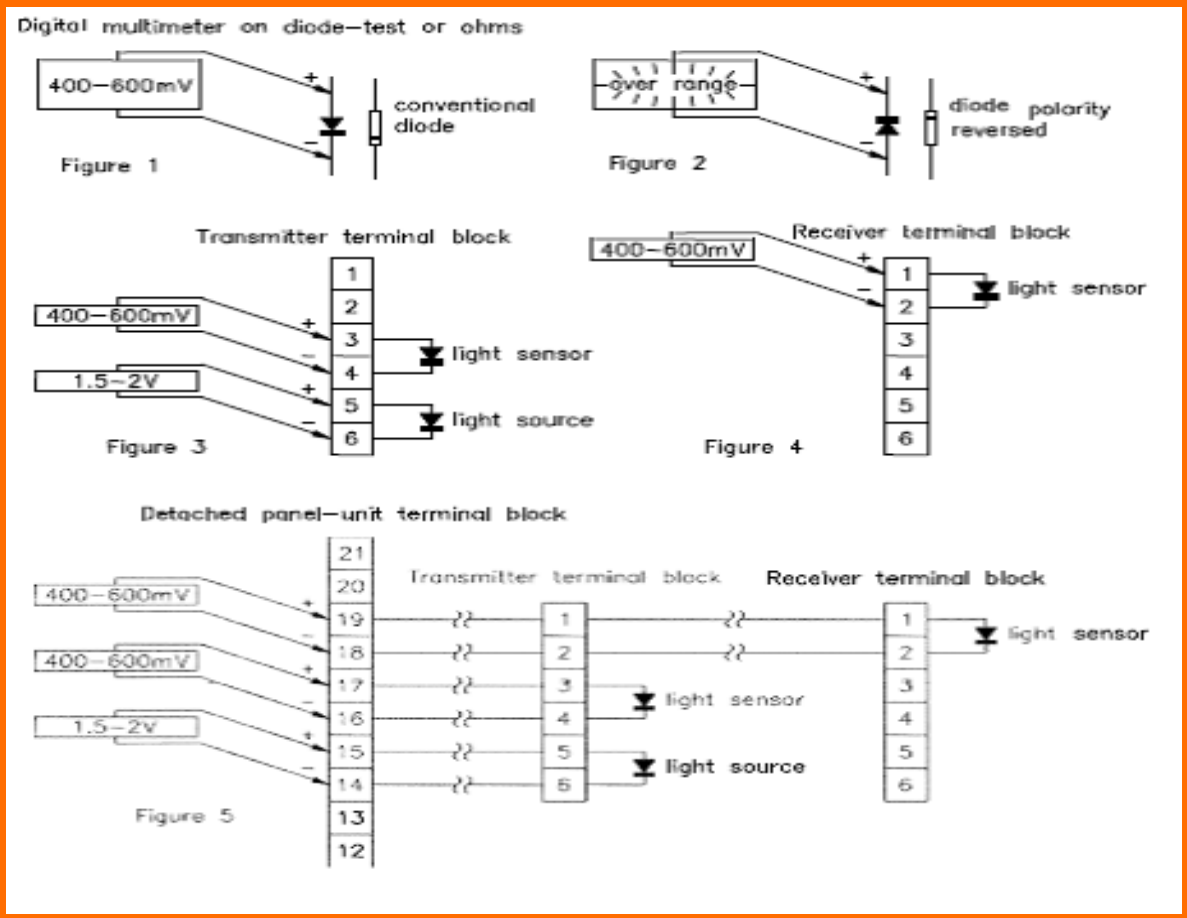

SCAN TRONIC
COMBUSTION OPTIMIZING



+45 21 66 00 85



info@scan-tronic.dk

SCAN TRONIC
COMBUSTION OPTIMIZING

Scan Tronic ApS
Sverigesvej 14
DK-8700
info@scan-tronic.dk
www.scan-tronic.dk